NAMEOF CANDIDATE: _____ EXAMINATION NO:_____

NKHOMA SYNOD MOCK EXAMINATIONS

PHYSICS

Subject Number: M164/II
Time Allowed: 2 hour sessions
08:00 am onwards

Friday, 20 May, 2022

PAPER II
(40 marks)

Practical

Instruction

1. **This paper contains 7 printed pages. Please check.**
2. Before beginning fill in your Examination Number at the top of each page of the question paper.
3. Write your answers on the question paper.
4. This paper consists of **two** sections **A** and **B**.
5. Section A consists of two descriptive questions on practical work to be answered in **1 hour. Marks** will be given for accurate and orderly presentation of facts supported by relevant diagrams.
6. In section B there are two practical questions to be answered in **1hour**
7. Marks for section **B** will be given for observation accuracy and interpretation of results.
8. You should spend 30 minutes on each question. The 30 minute period allowed for each question includes 3 minutes to tidy up the apparatus and have it checked by the supervisor.
9. In the table provided on this page, **tick** against the question number you have answered.

Question Number	Tick if answered	Do not write in these columns	
1			
2			
3			
4			

Section A (20 marks)

1. A spring with unknown spring constant was found in the Laboratory preparatory room. With the aid of a well labeled diagram, describe an experiment you could conduct to deduce it's constant.

_____
_____
_____
_____
_____
_____
_____
_____
_____
_____
_____
_____
_____
_____
_____
_____
_____
_____
_____
_____(10 marks)

2. With the aid of a well labeled diagram, describe an experiment you could conduct to show that cooking oil and water have different specific heat capacities.

_____

_____

_____

_____

_____

_____

_____

_____

_____

_____

_____

_____

_____

_____

_____

_____

_____ (10 marks)

Section B (20 marks)

3. You are provided with a convex lens, 1 meter ruler, white cardboard, candle, matches and lens holder

   a. Arrange the apparatus as shown in **Figure 1**.

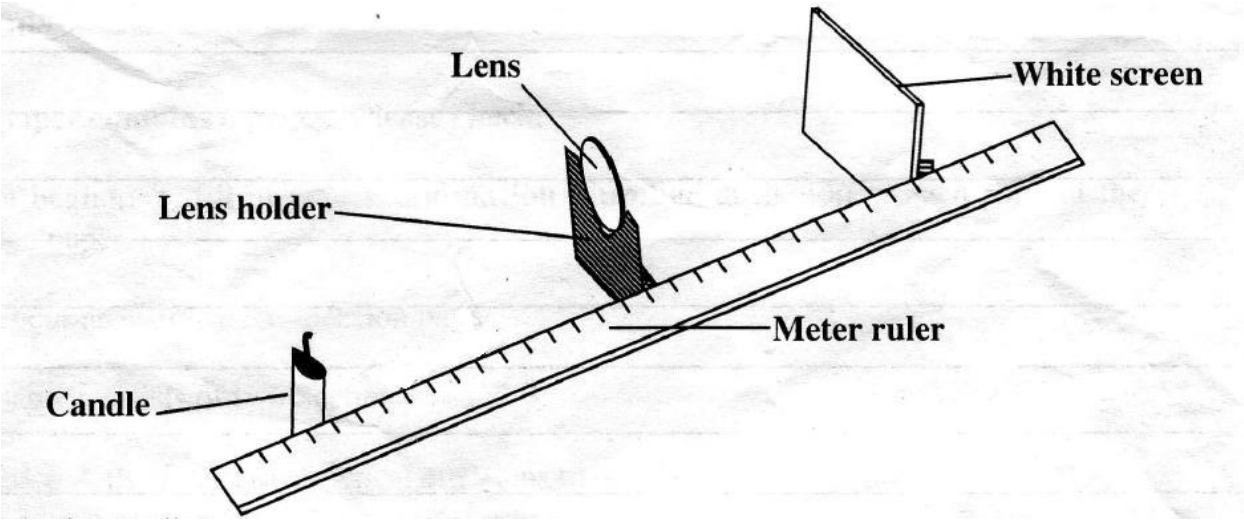

   b. Light the candle
   c. Adjust the candle so that the distance from the candle to the centre of the lens (u) is 12cm
   d. Move the screen until you get a clear image of the candle flame on the screen
   e. Measure the distance from the screen to the centre of the lens (v) and record in the second column of table 1.
   f. Repeat steps c to e for object distances of 15cm, 20cm and 30cm.

Table 1

Object didtance (u) cm	**Image distance (v) cm**
12	
15	
20	
30	

   g. Complete the second column of table 1 (4 marks)

h. Plot a graph of v against u (5 marks)

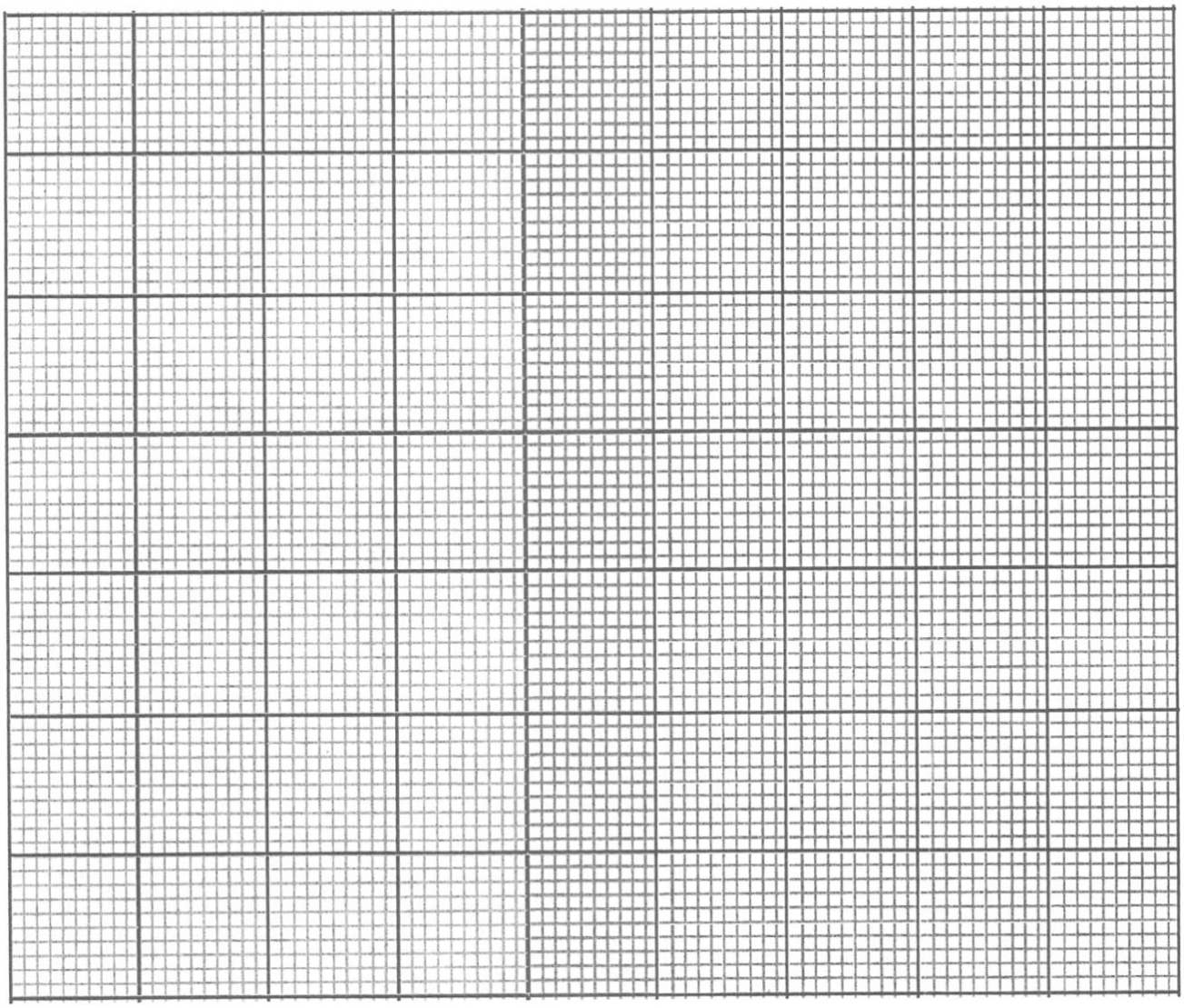

i. From the graph determine the focal length of the lens (1 mark)

4. You are provided with a spring, clamp and clamp stand, stop watch and 4 masses (50g, 100g, 150g and 200g).

   a. Arrange the apparatus as shown below.

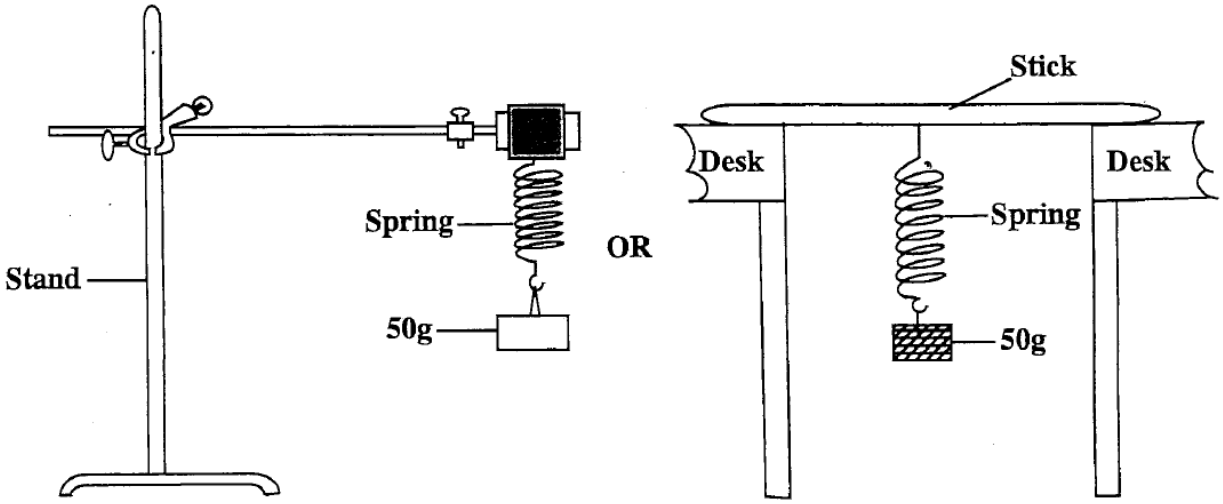

   b. Pull the mass downwards by a small amount and leave it to vibrate freely.

   c. Record in the table of results the time taken to make 10 complete vibrations.

   d. Repeat steps **b and c** using 100g, 150g and 200g respectively.

   e. Complete the column for the number of vibrations per second in the table

Table 2 (5 marks)

Mass (g)	**Time for 10 vibrations (s)**	**Frequency**
50		
100		
150		
200		

f. Plot a graph of frequency against mass. (4 marks)

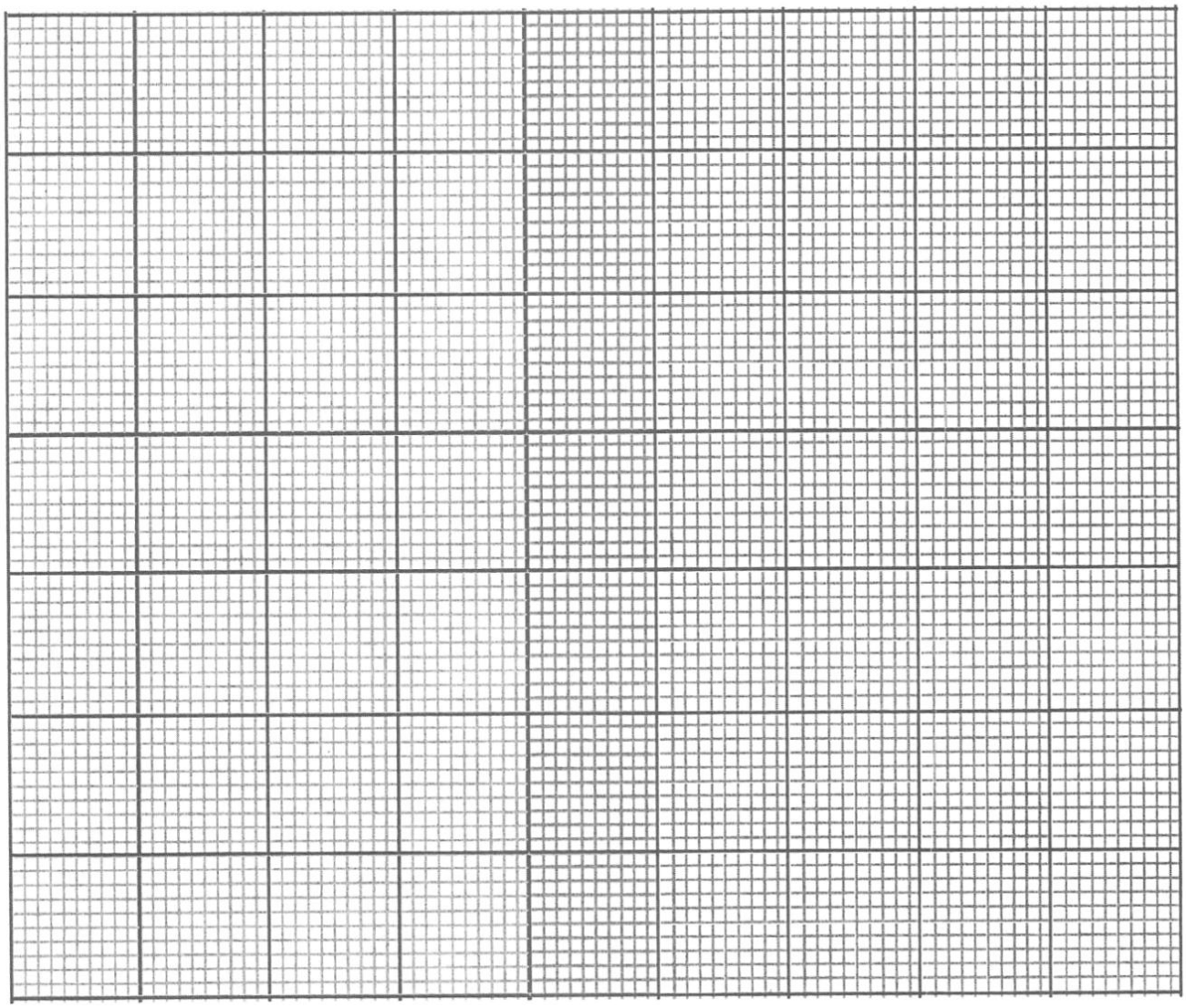

g. Using the graph, determine how mass affects the number of vibrations per second.

_____

_____ (1 mark)

END OF QUESTION PAPER

NB: this paper contains 7 pages